# Thermodynamic Cycles

## *Effective Modeling Strategies for Software Development*

### ...just the color figures for those who got the B&W printed book...

**D. James Benton**

Copyright © 2019 by D. James Benton, all rights reserved.

**Foreword**

Efficient design, operation, and maintenance of power and process systems require accurate and effective thermodynamic cycle modeling tools. Many such tools exist; however, the logic and programming of these tools vary considerably, making them more or less practical for differing applications. This book is a compilation of what to do and what to avoid, including the details of how to best accomplish the desired end. All of the data and source code are available free online.

*All of the examples contained in this book,*
*(as well as a lot of free programs) are available at…*
*http://www.dudleybenton.altervista.org/software/index.html*

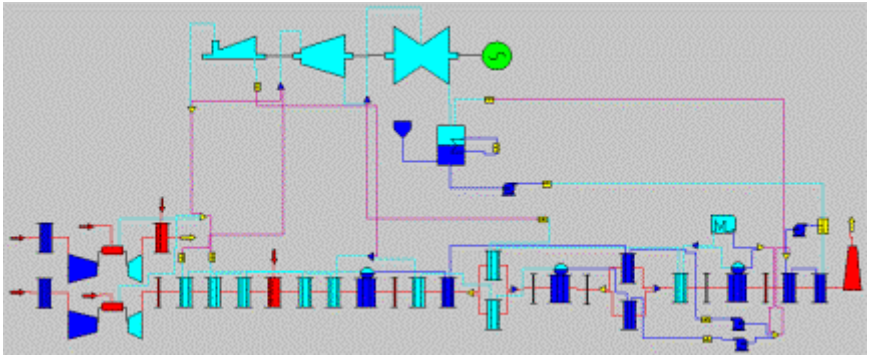

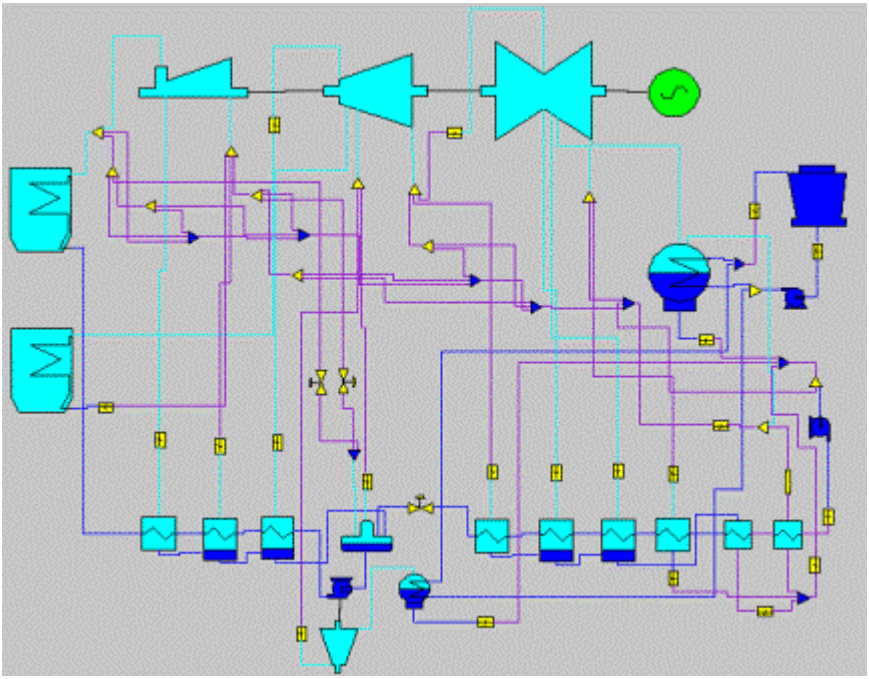

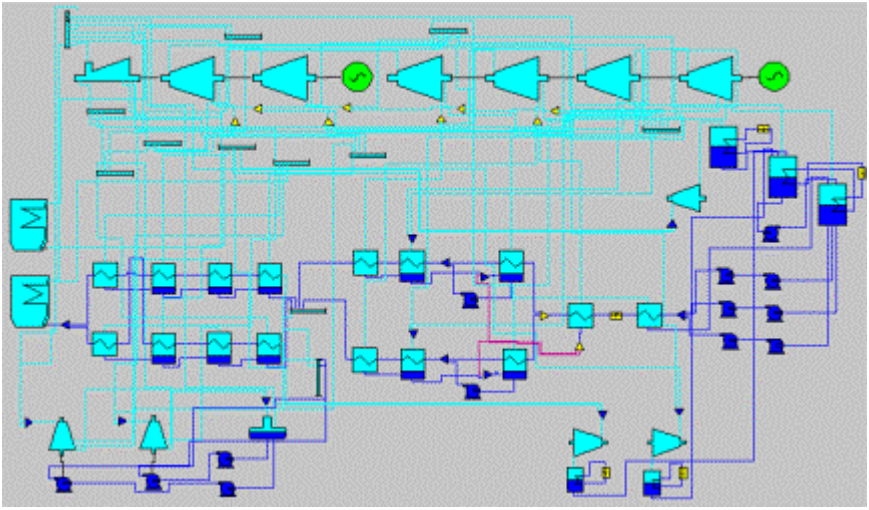

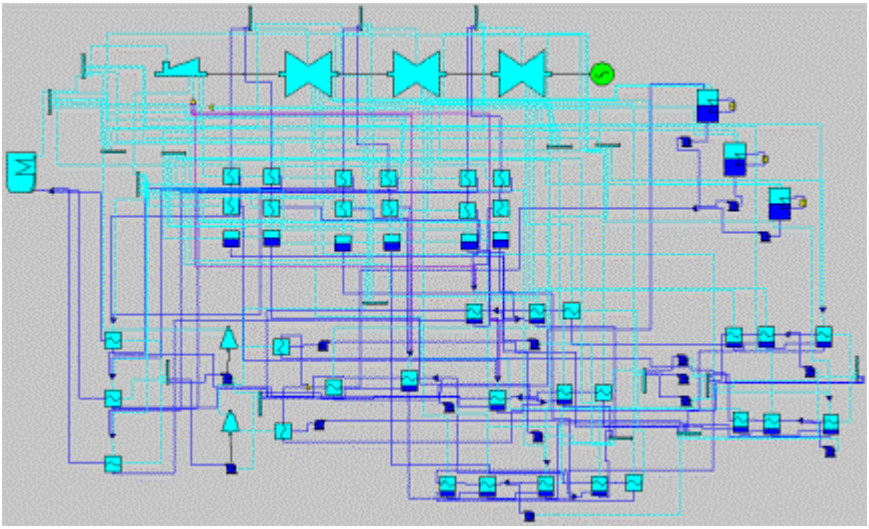

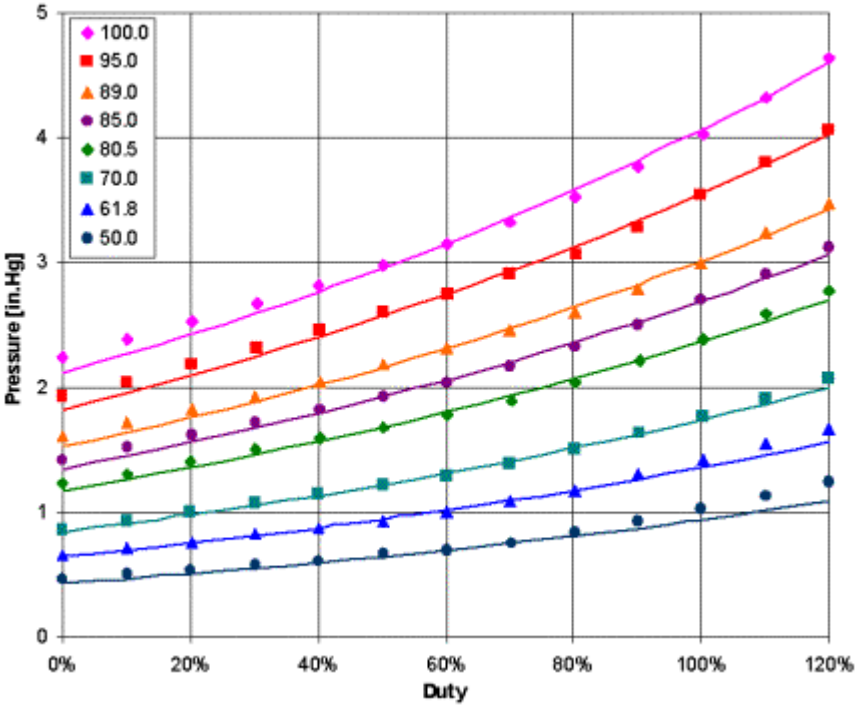
100.0
95.0
89.0
85.0
80.5
70.0
61.8
50.0
Pressure [in.Hg]
0
1
2
3
4
5
0%
20%
40%
60%
80%
100%
120%
Duty

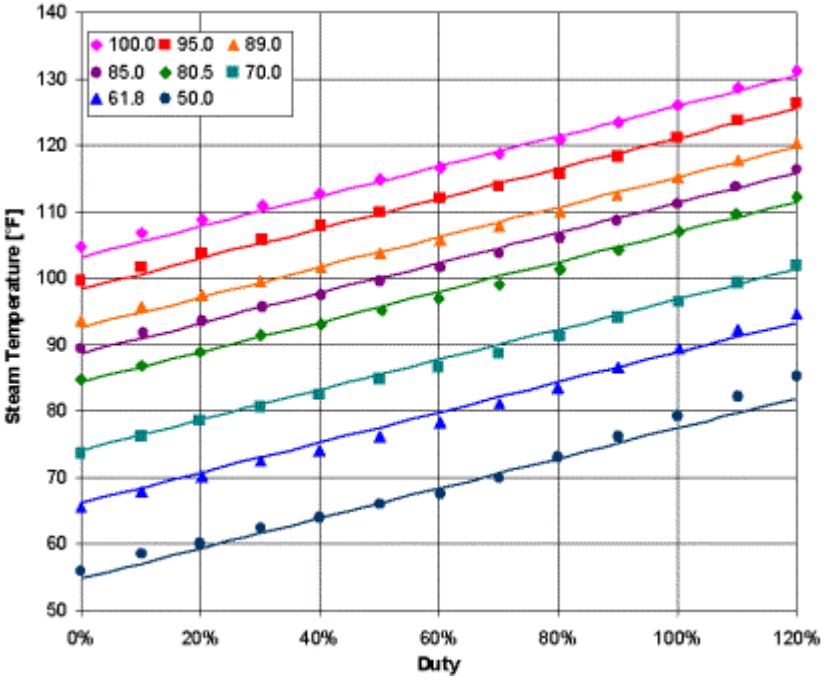
100.0
95.0
89.0
85.0
80.5
70.0
61.8
50.0
Steam Temperature [°F]
Duty
140
130
120
110
100
90
80
70
60
50
0%
20%
40%
60%
80%
100%
120%

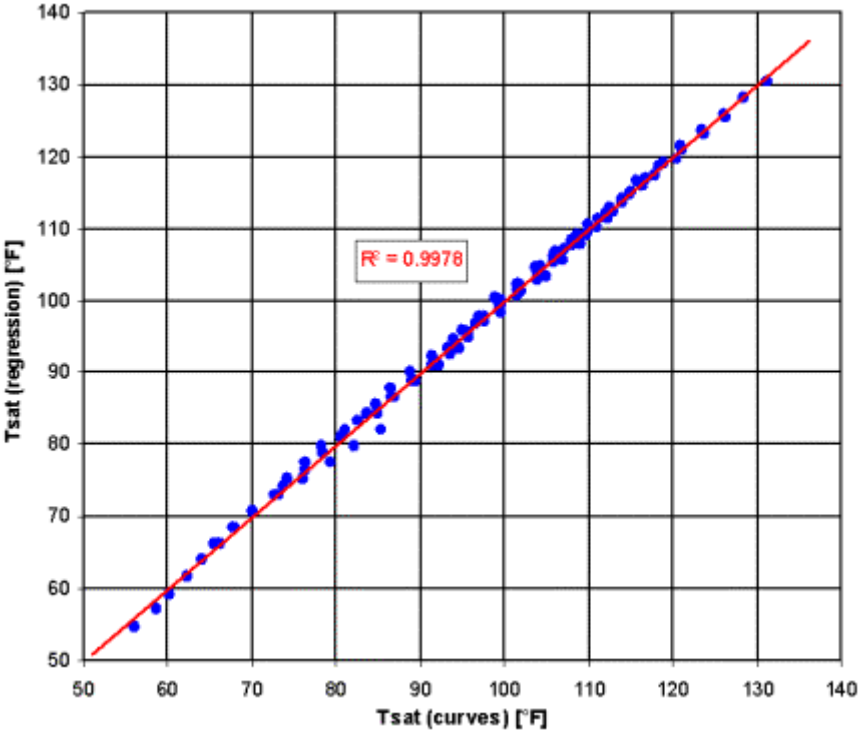
R² = 0.9978
Tsat (regression) [°F]
Tsat (curves) [°F]
140
130
120
110
100
90
80
70
60
50
50
60
70
80
90
100
110
120
130
140

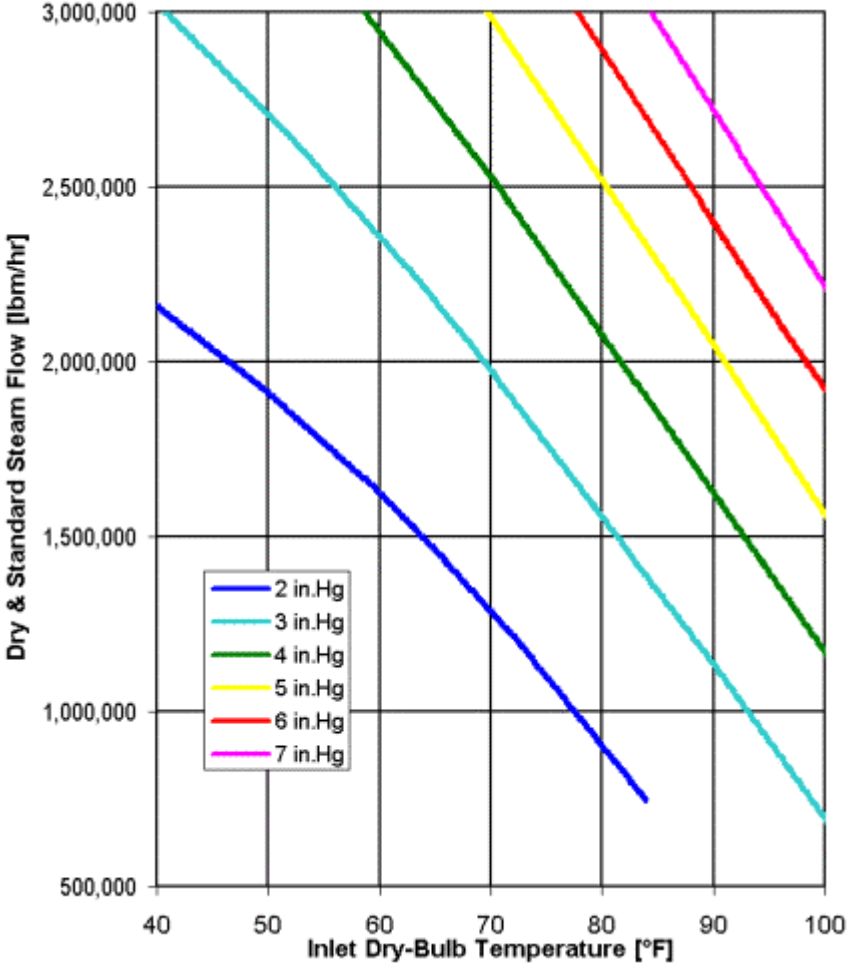
3,000,000
2,500,000
2,000,000
1,500,000
1,000,000
500,000
Dry & Standard Steam Flow [lbm/hr]
40
50
60
70
80
90
100
Inlet Dry-Bulb Temperature [°F]
2 in.Hg
3 in.Hg
4 in.Hg
5 in.Hg
6 in.Hg
7 in.Hg

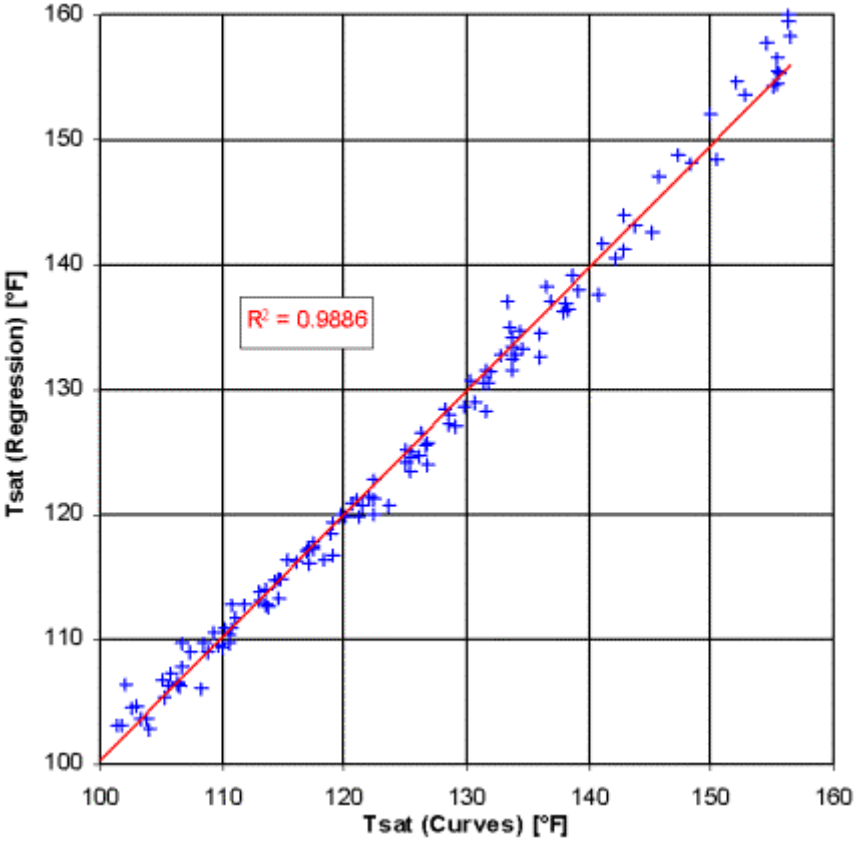
160
150
140
130
120
110
100
R² = 0.9886
Tsat (Regression) [°F]
100
110
120
130
140
150
160
Tsat (Curves) [°F]

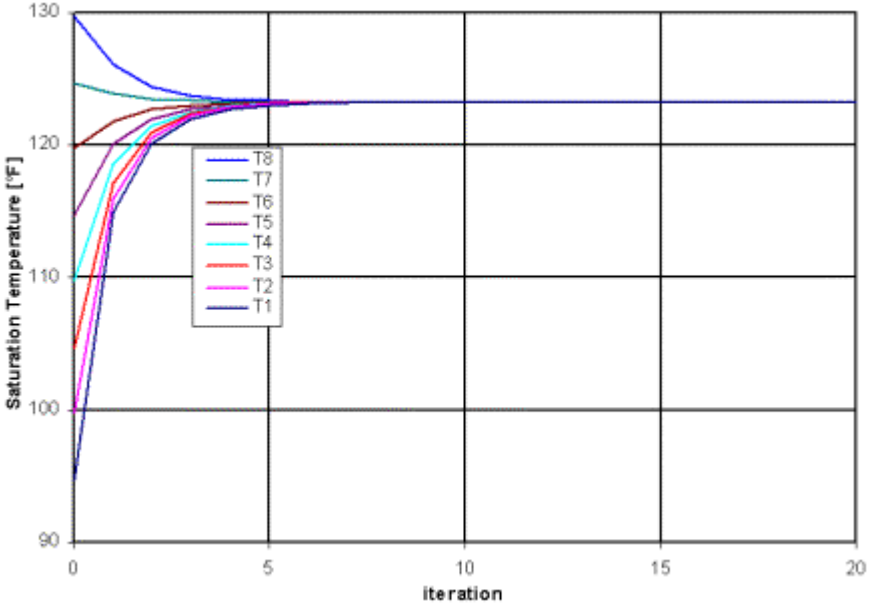
130
120
110
100
90
Saturation Temperature [°F]
0
5
10
15
20
iteration
T8
T7
T6
T5
T4
T3
T2
T1

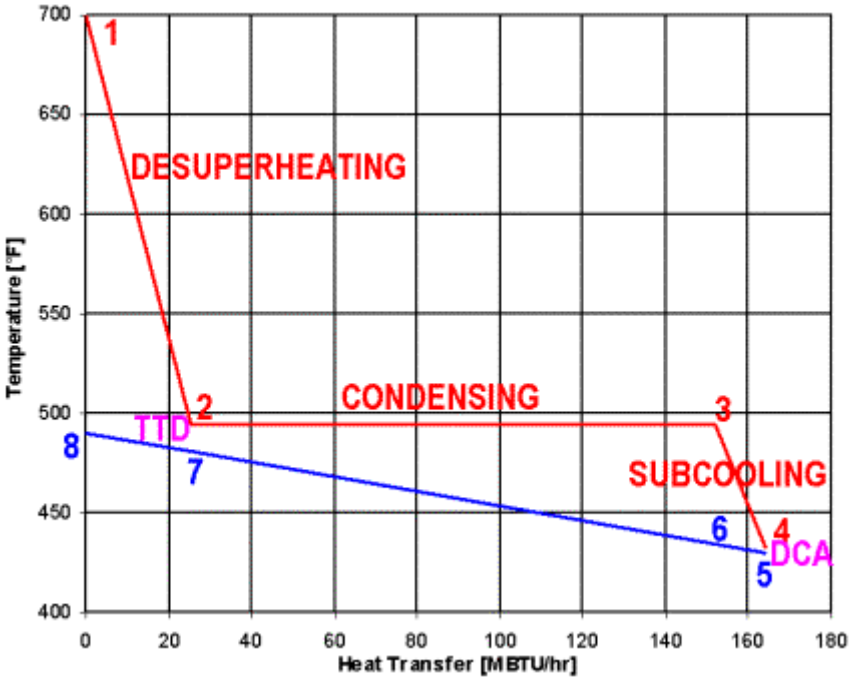
700
650
600
550
500
450
400
Temperature [°F]
0
20
40
60
80
100
120
140
160
180
Heat Transfer [MBTU/hr]
1
DESUPERHEATING
2
CONDENSING
3
TTD
8
7
SUBCOOLING
6
4
DCA
5

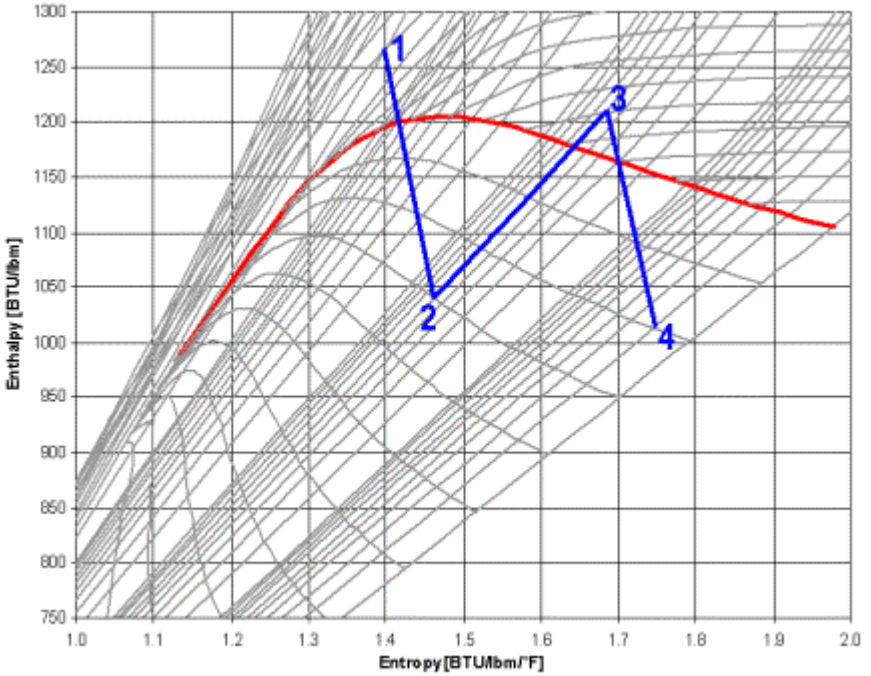
1300
1250
1200
1150
1100
1050
1000
950
900
850
800
750
Enthalpy [BTU/lbm]
1.0
1.1
1.2
1.3
1.4
1.5
1.6
1.7
1.8
1.9
2.0
Entropy [BTU/lbm/°F]
1
2
3
4

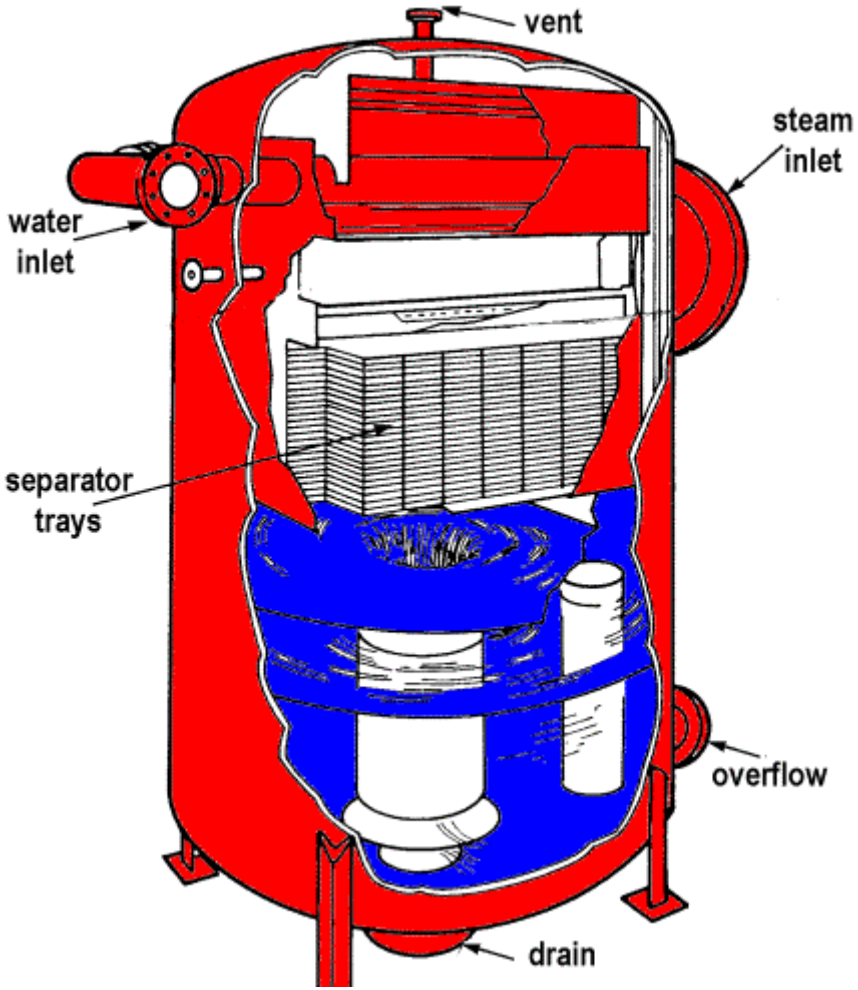
vent
steam
inlet
water
inlet
separator
trays
overflow
drain

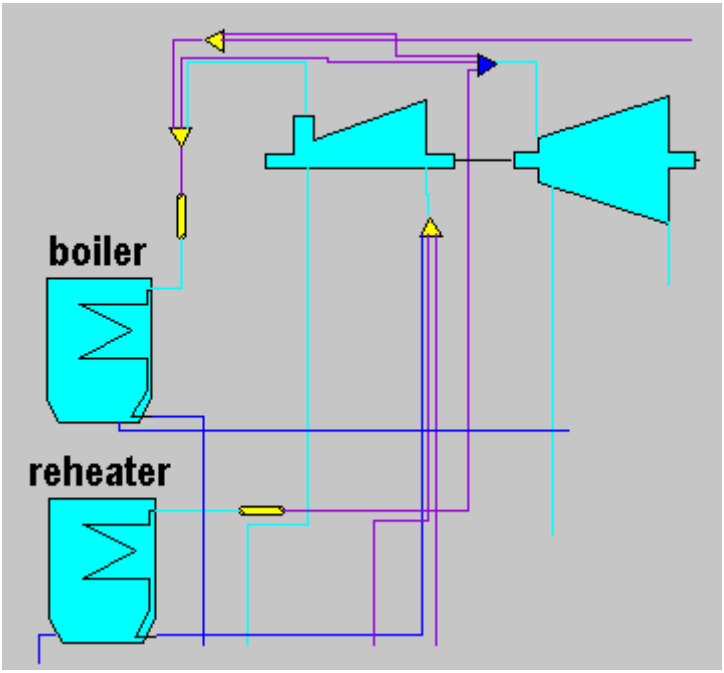
boiler
reheater

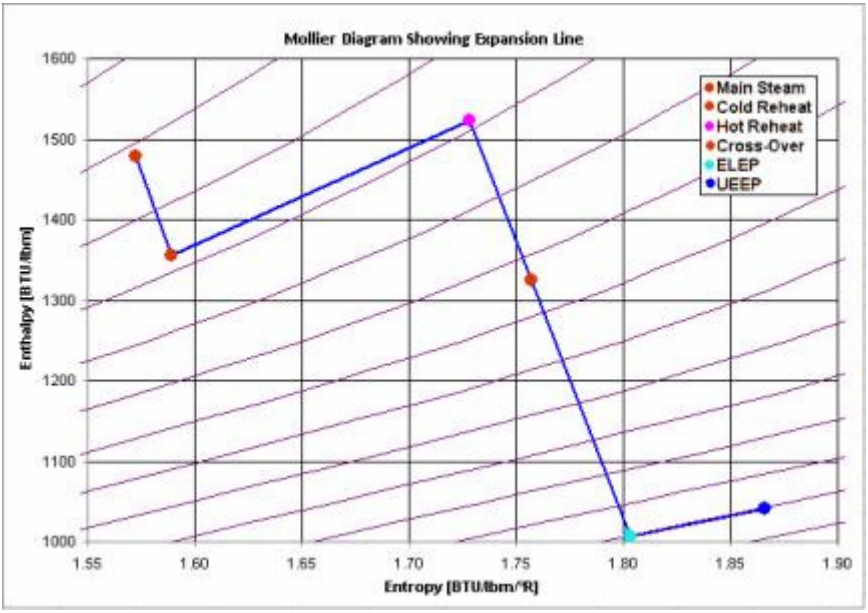
Mollier Diagram Showing Expansion Line
Main Steam
Cold Reheat
Hot Reheat
Cross-Over
ELEP
UEEP
Enthalpy [BTU/lbm]
Entropy [BTU/lbm/°R]
1600
1500
1400
1300
1200
1100
1000
1.55
1.60
1.65
1.70
1.75
1.80
1.85
1.90

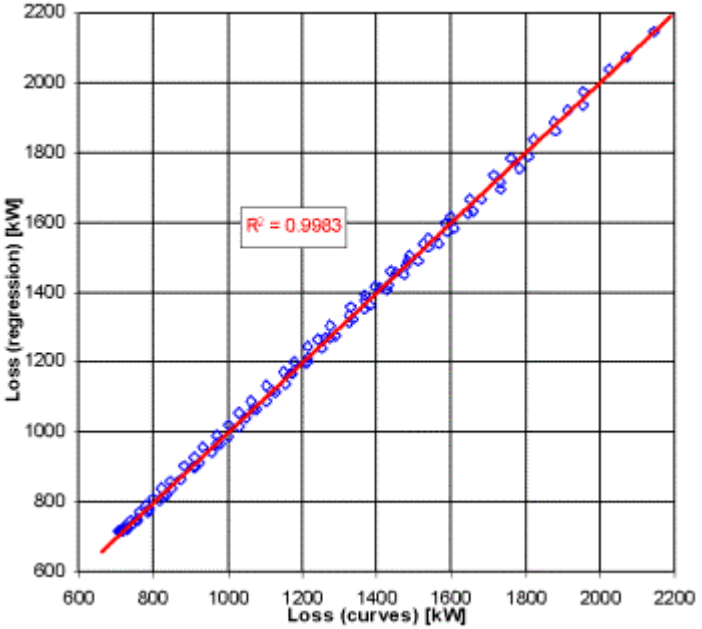
2200
2000
1800
1600
1400
1200
1000
800
600
Loss (regression) [kW]
R² = 0.9983
600
800
1000
1200
1400
1600
1800
2000
2200
Loss (curves) [kW]

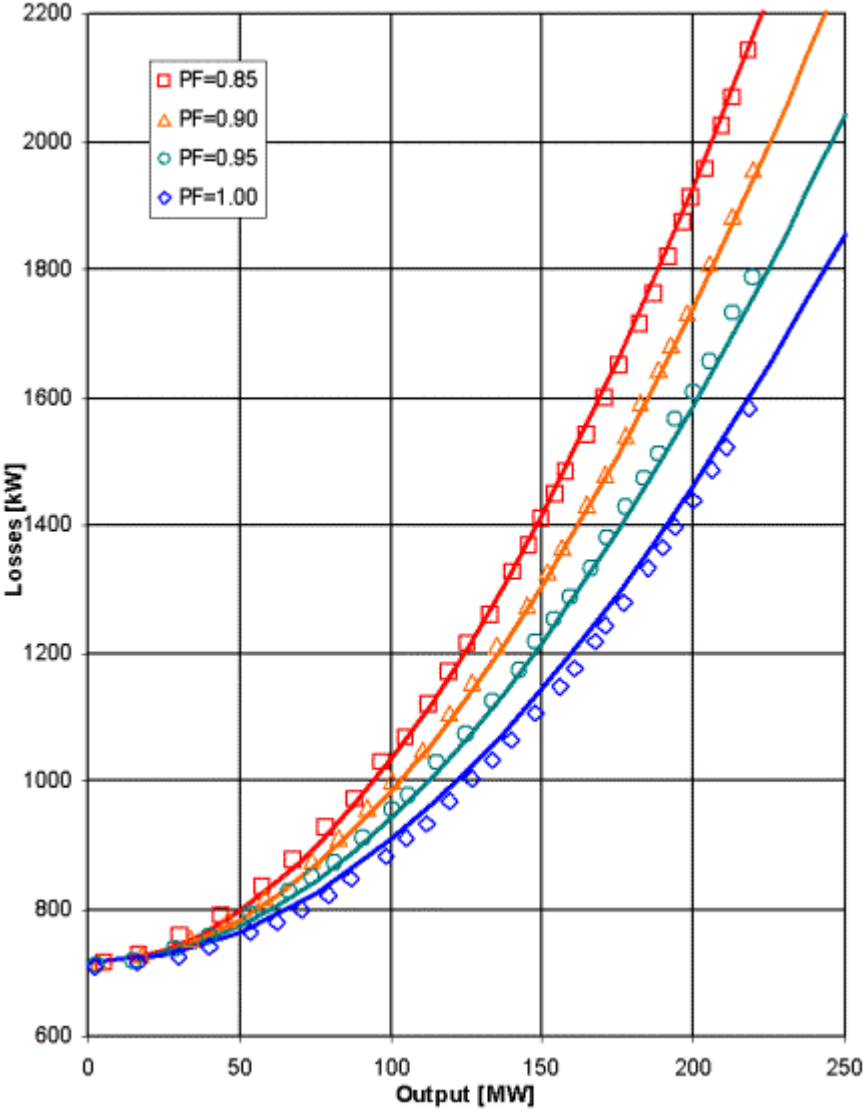
PF=0.85
PF=0.90
PF=0.95
PF=1.00
Losses [kW]
Output [MW]
2200
2000
1800
1600
1400
1200
1000
800
600
0
50
100
150
200
250

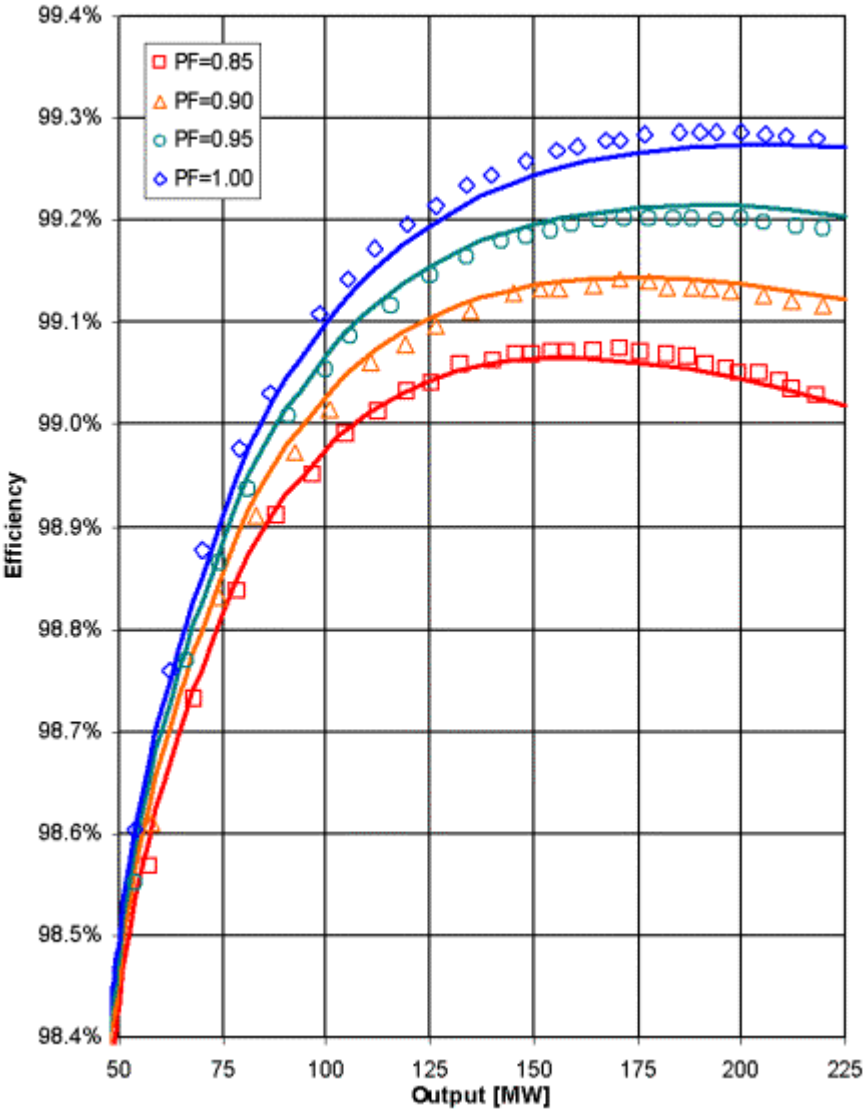
PF=0.85
PF=0.90
PF=0.95
PF=1.00
99.4%
99.3%
99.2%
99.1%
99.0%
98.9%
98.8%
98.7%
98.6%
98.5%
98.4%
Efficiency
50
75
100
125
150
175
200
225
Output [MW]

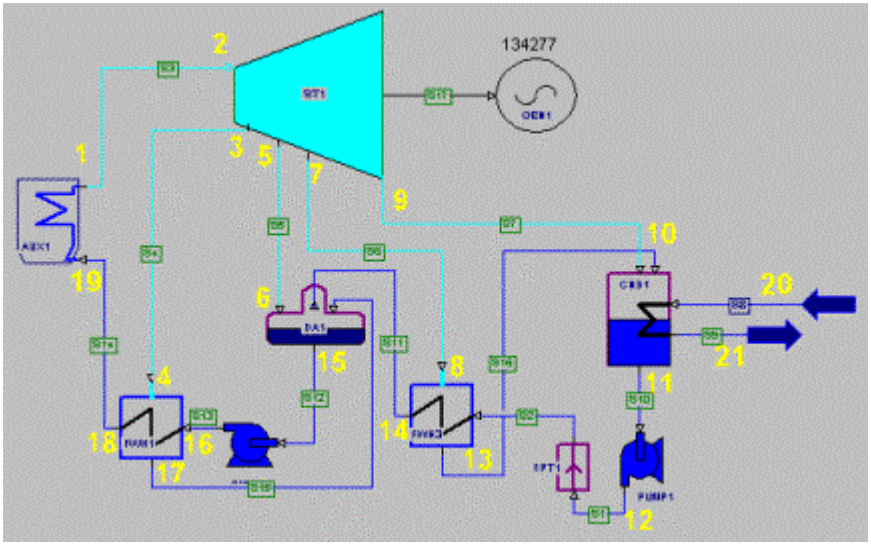
134277
ST1
OEB1
AEX1
DA1
RAM1
RAM3
CRS1
EPT1
PUMP1
1
2
3
4
5
6
7
8
9
10
11
12
13
14
15
16
17
18
19
20
21

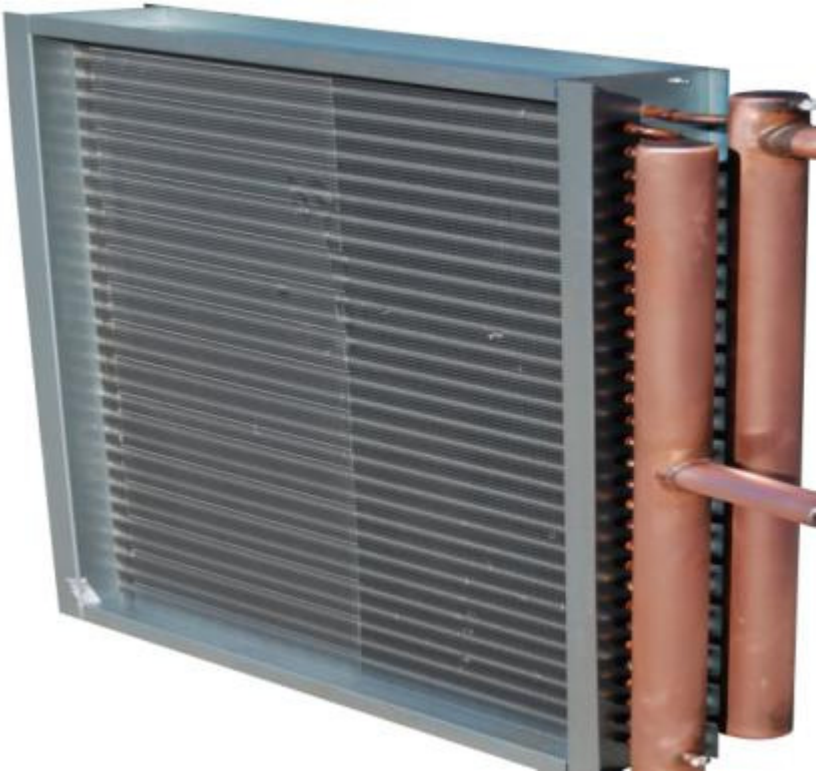

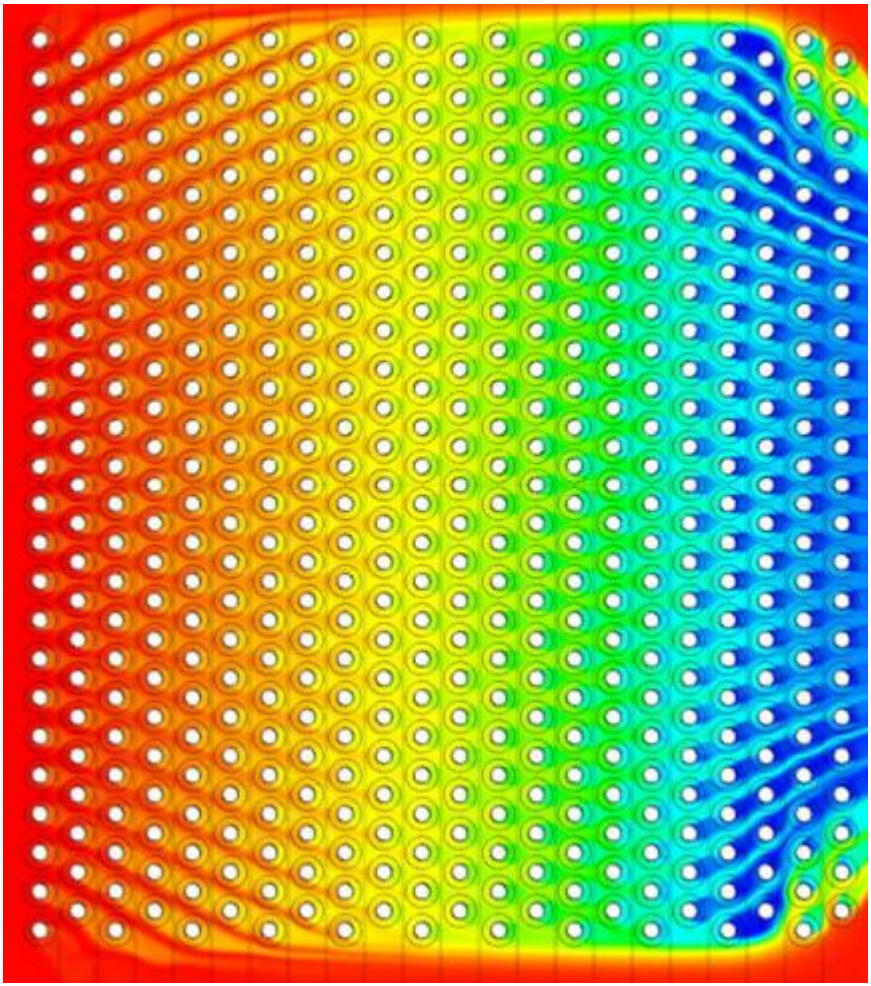

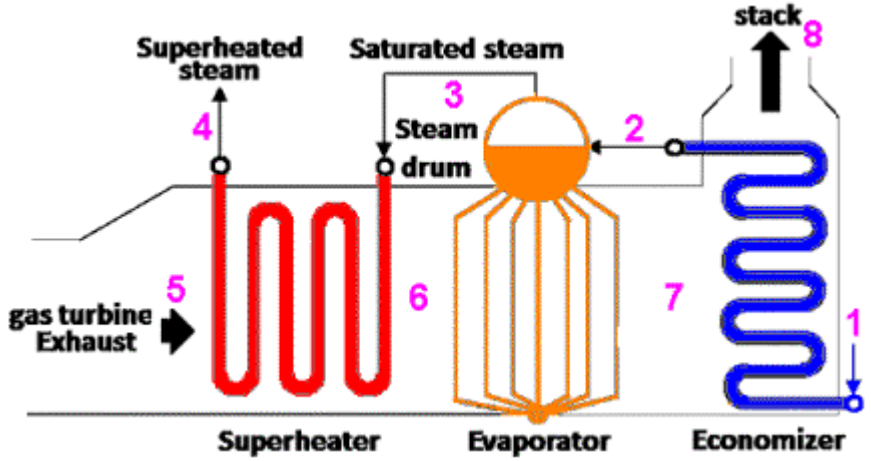
stack
8
Superheated steam
Saturated steam
3
4
Steam drum
2
gas turbine Exhaust
5
6
7
1
Superheater
Evaporator
Economizer

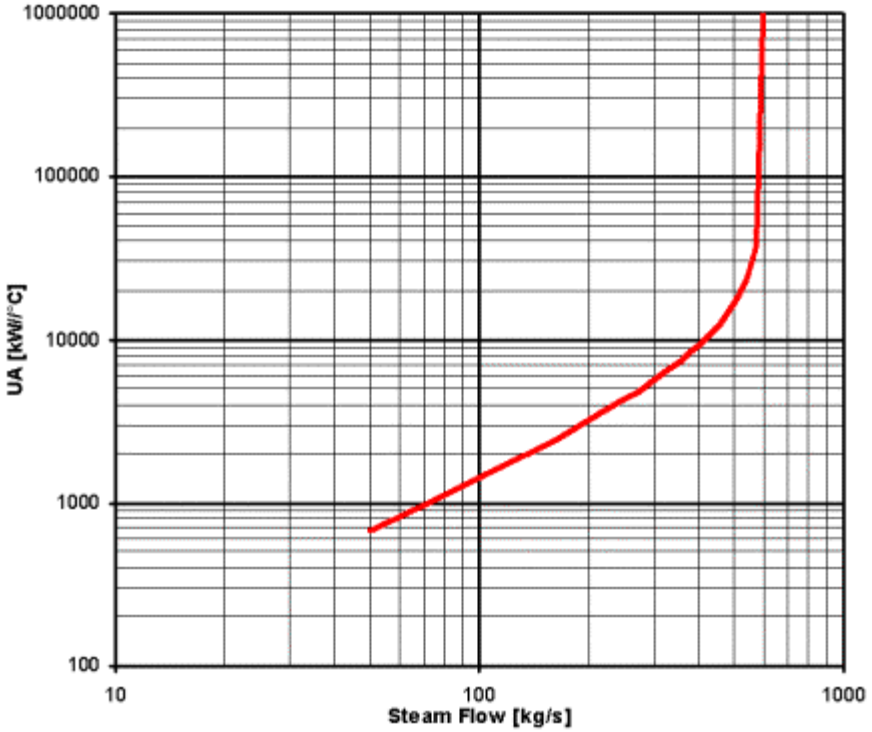
1000000
100000
10000
1000
100
UA [kW/°C]
10
100
1000
Steam Flow [kg/s]

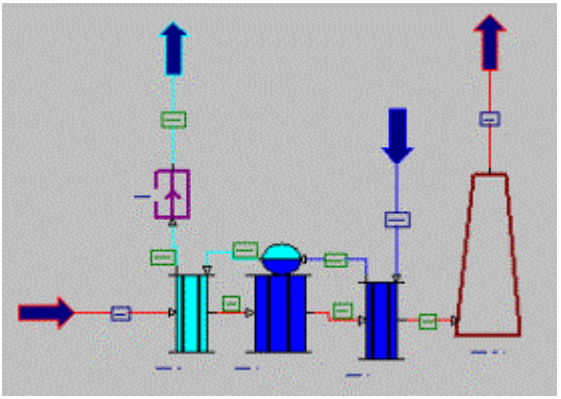

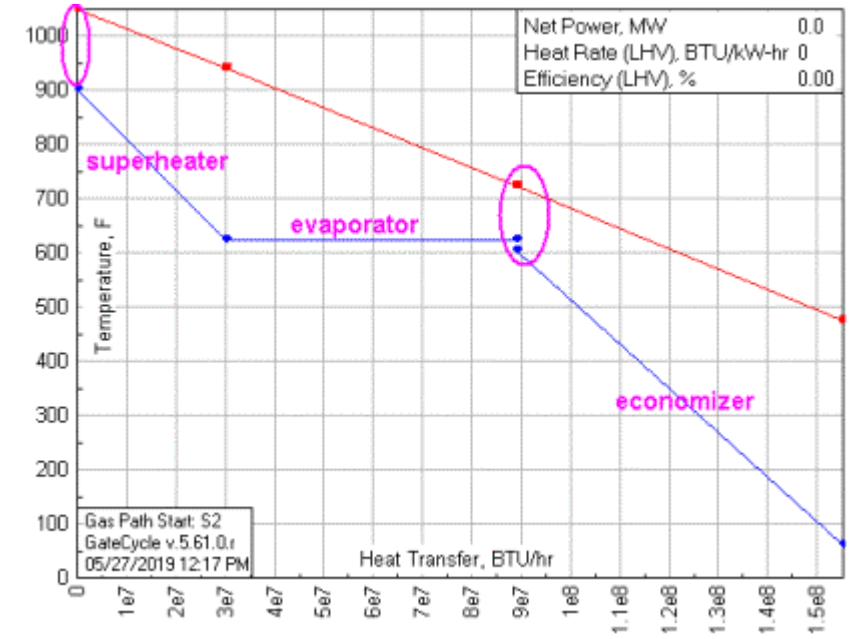
Net Power, MW 0.0
Heat Rate (LHV), BTU/kW-hr 0
Efficiency (LHV), % 0.00
superheater
evaporator
economizer
Temperature, F
Heat Transfer, BTU/hr
Gas Path Start: S2
GateCycle v.5.61.0.r
05/27/2019 12:17 PM
0
100
200
300
400
500
600
700
800
900
1000
1e7
2e7
3e7
4e7
5e7
6e7
7e7
8e7
9e7
1e8
1.1e8
1.2e8
1.3e8
1.4e8
1.5e8

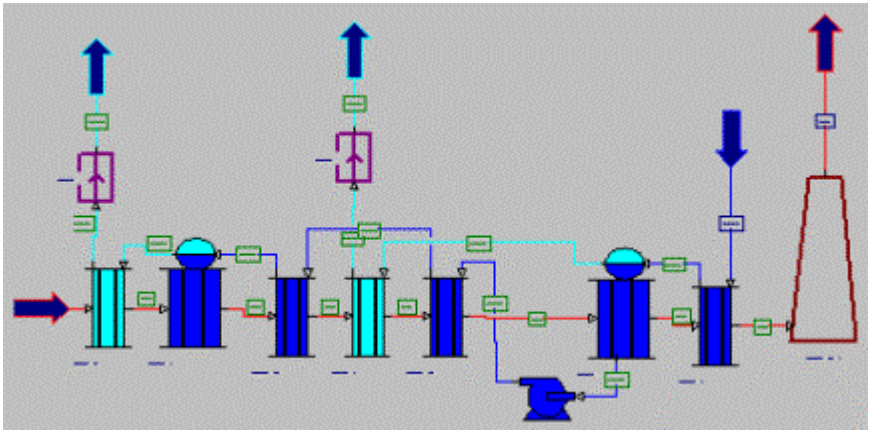

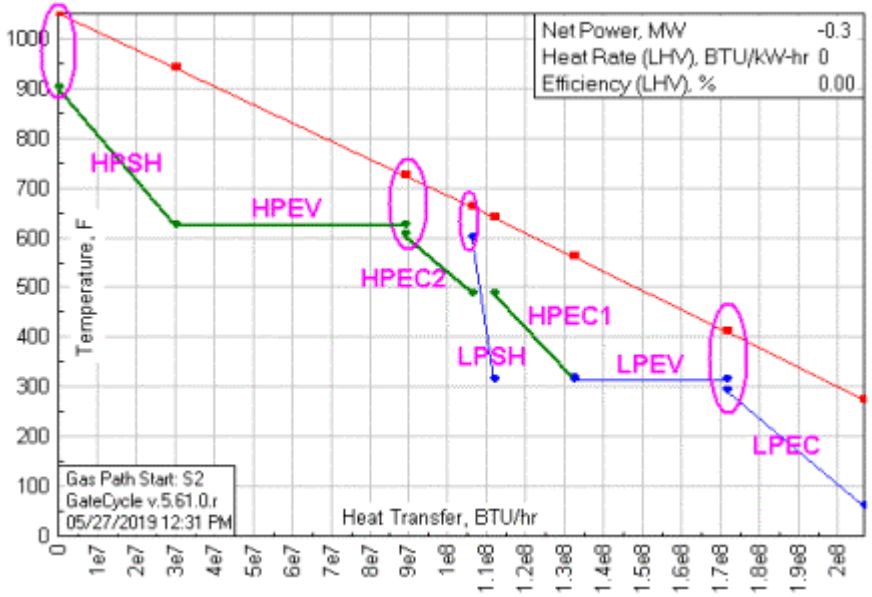
Net Power, MW -0.3
Heat Rate (LHV), BTU/kW-hr 0
Efficiency (LHV), % 0.00
HPSH
HPEV
HPEC2
HPEC1
LPSH
LPEV
LPEC
Temperature, F
Heat Transfer, BTU/hr
Gas Path Start: S2
GateCycle v.5.61.0.r
05/27/2019 12:31 PM

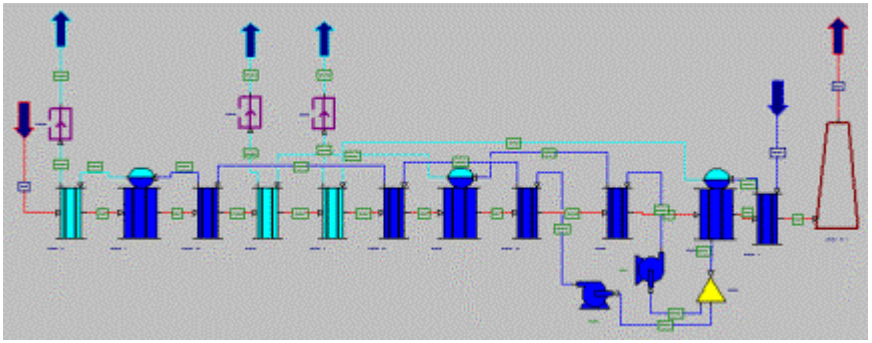

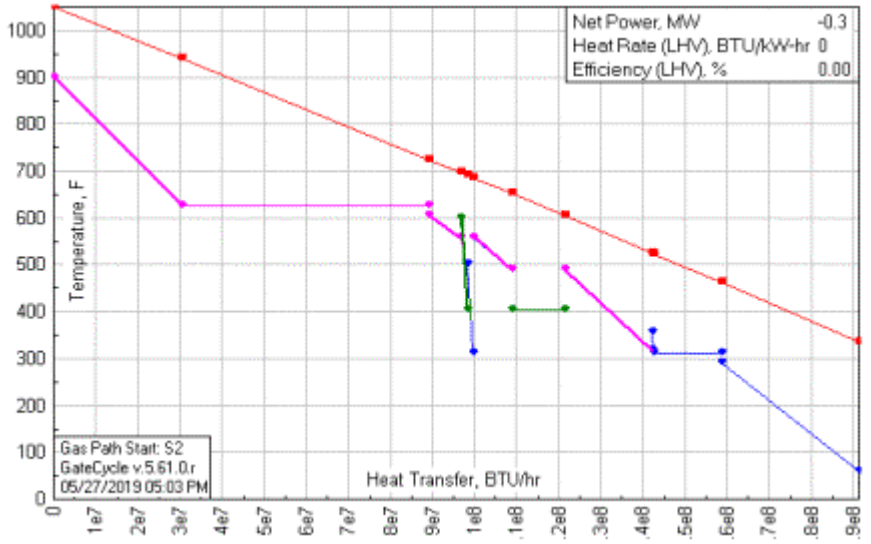
Net Power, MW -0.3
Heat Rate (LHV), BTU/kW-hr 0
Efficiency (LHV), % 0.00
Temperature, F
Heat Transfer, BTU/hr
Gas Path Start: S2
GateCycle v.5.61.0.r
05/27/2019 05:03 PM

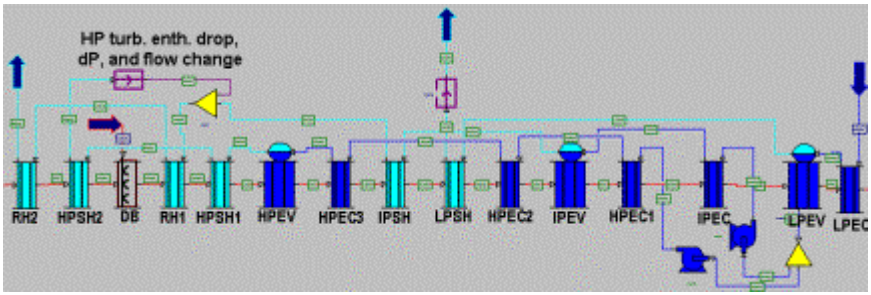
HP turb. enth. drop,
dP, and flow change
RH2
HPSH2
DB
RH1
HPSH1
HPEV
HPEC3
IPSH
LPSH
HPEC2
IPEV
HPEC1
IPEC
LPEV
LPEC

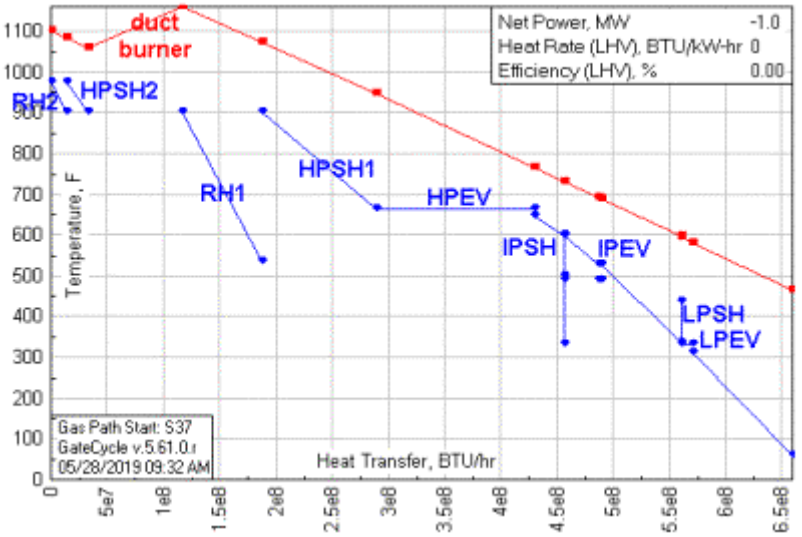
duct
burner
HPSH2
RH2
RH1
HPSH1
HPEV
IPSH
IPEV
LPSH
LPEV
Net Power, MW -1.0
Heat Rate (LHV), BTU/kW-hr 0
Efficiency (LHV), % 0.00
Temperature, F
Heat Transfer, BTU/hr
Gas Path Start: S37
GateCycle v.5.61.0.r
05/28/2019 09:32 AM
0
100
200
300
400
500
600
700
800
900
1000
1100
5e7
1e8
1.5e8
2e8
2.5e8
3e8
3.5e8
4e8
4.5e8
5e8
5.5e8
6e8
6.5e8

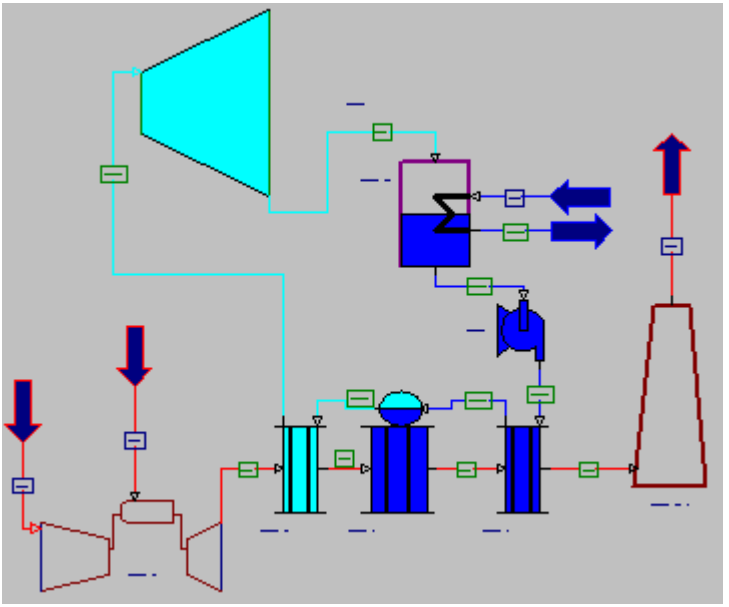

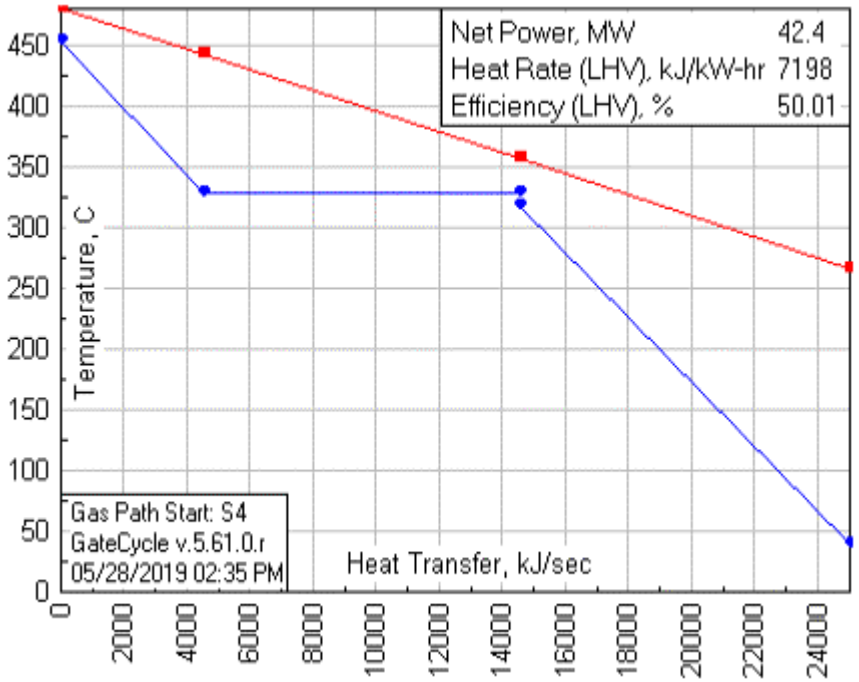
Net Power, MW 42.4
Heat Rate (LHV), kJ/kW-hr 7198
Efficiency (LHV), % 50.01
Temperature, C
Heat Transfer, kJ/sec
Gas Path Start: S4
GateCycle v.5.61.0.r
05/28/2019 02:35 PM
0
50
100
150
200
250
300
350
400
450
0
2000
4000
6000
8000
10000
12000
14000
16000
18000
20000
22000
24000

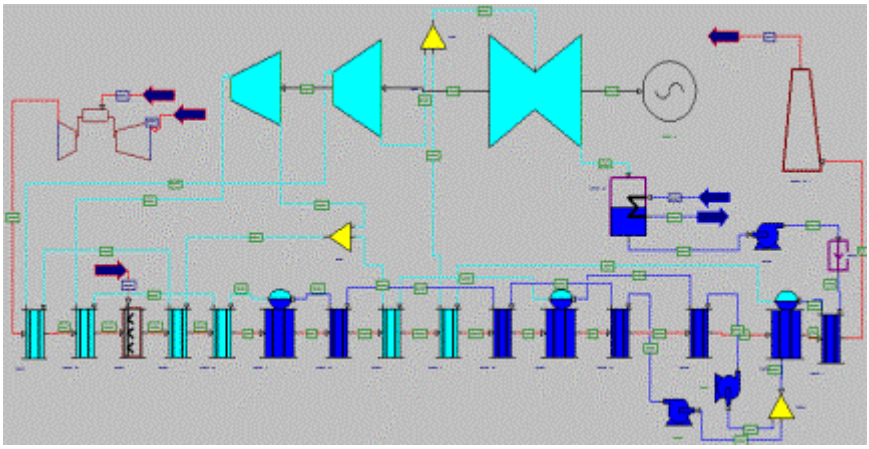

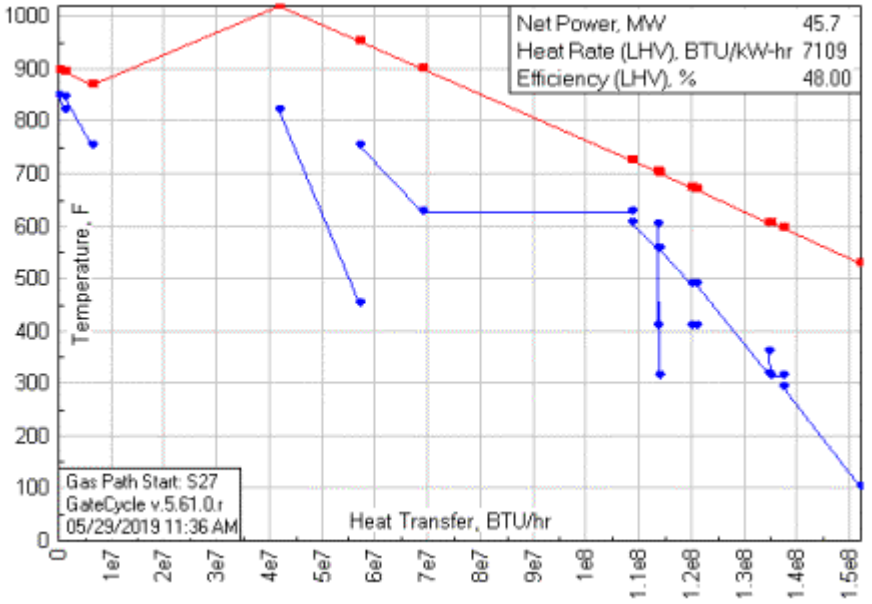
Net Power, MW 45.7
Heat Rate (LHV), BTU/kW-hr 7109
Efficiency (LHV), % 48.00
Temperature, F
Heat Transfer, BTU/hr
Gas Path Start: S27
GateCycle v.5.61.0.r
05/29/2019 11:36 AM
0
100
200
300
400
500
600
700
800
900
1000
0
1e7
2e7
3e7
4e7
5e7
6e7
7e7
8e7
9e7
1e8
1.1e8
1.2e8
1.3e8
1.4e8
1.5e8

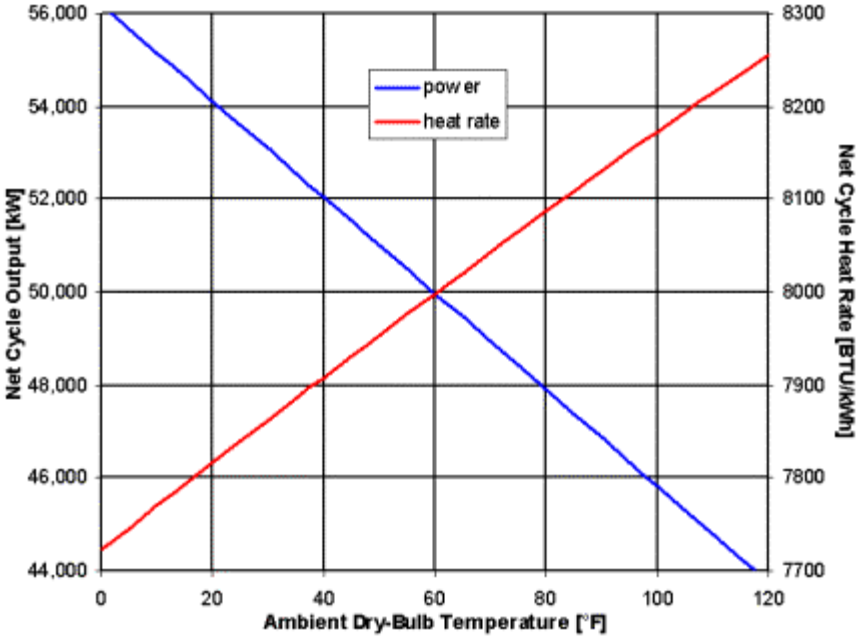
power
heat rate
Net Cycle Output [kW]
Net Cycle Heat Rate [BTU/kWh]
Ambient Dry-Bulb Temperature [°F]
56,000
54,000
52,000
50,000
48,000
46,000
44,000
8300
8200
8100
8000
7900
7800
7700
0
20
40
60
80
100
120

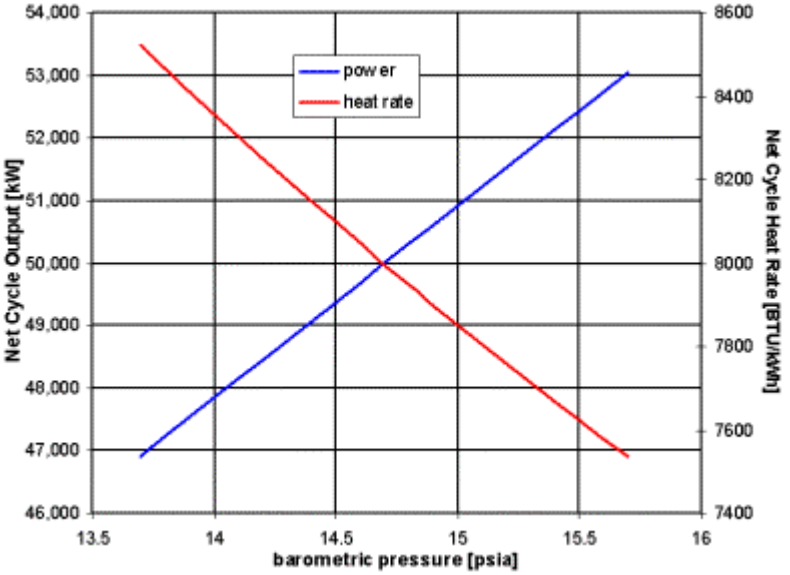
power
heat rate
Net Cycle Output [kW]
Net Cycle Heat Rate [BTU/kWh]
barometric pressure [psia]
54,000
53,000
52,000
51,000
50,000
49,000
48,000
47,000
46,000
8600
8400
8200
8000
7800
7600
7400
13.5
14
14.5
15
15.5
16

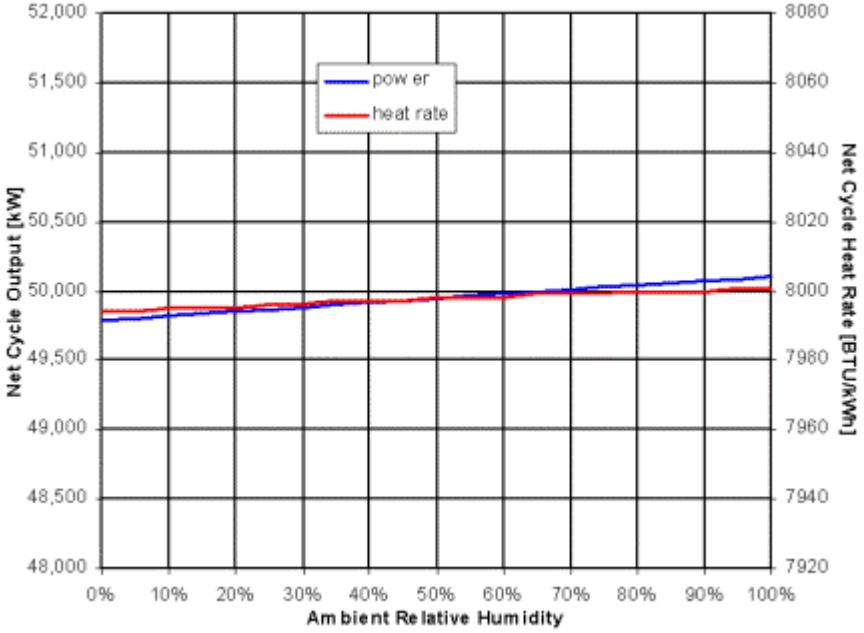
power
heat rate
Net Cycle Output [kW]
Net Cycle Heat Rate [BTU/kWh]
Ambient Relative Humidity
52,000
51,500
51,000
50,500
50,000
49,500
49,000
48,500
48,000
8080
8060
8040
8020
8000
7980
7960
7940
7920
0%
10%
20%
30%
40%
50%
60%
70%
80%
90%
100%

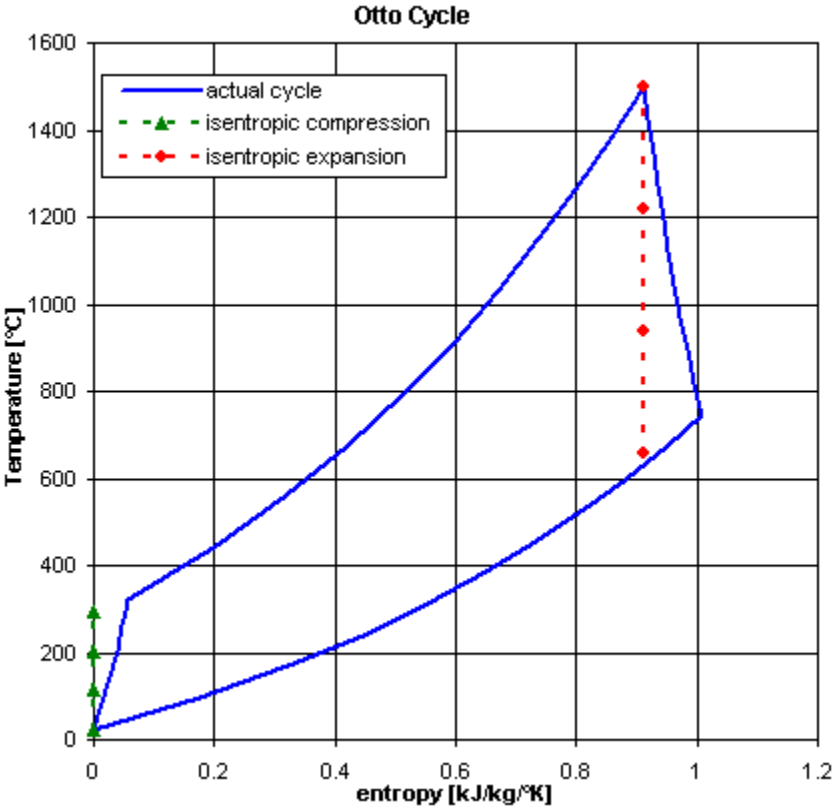
Otto Cycle
actual cycle
isentropic compression
isentropic expansion
Temperature [°C]
entropy [kJ/kg/°K]
1600
1400
1200
1000
800
600
400
200
0
0
0.2
0.4
0.6
0.8
1
1.2

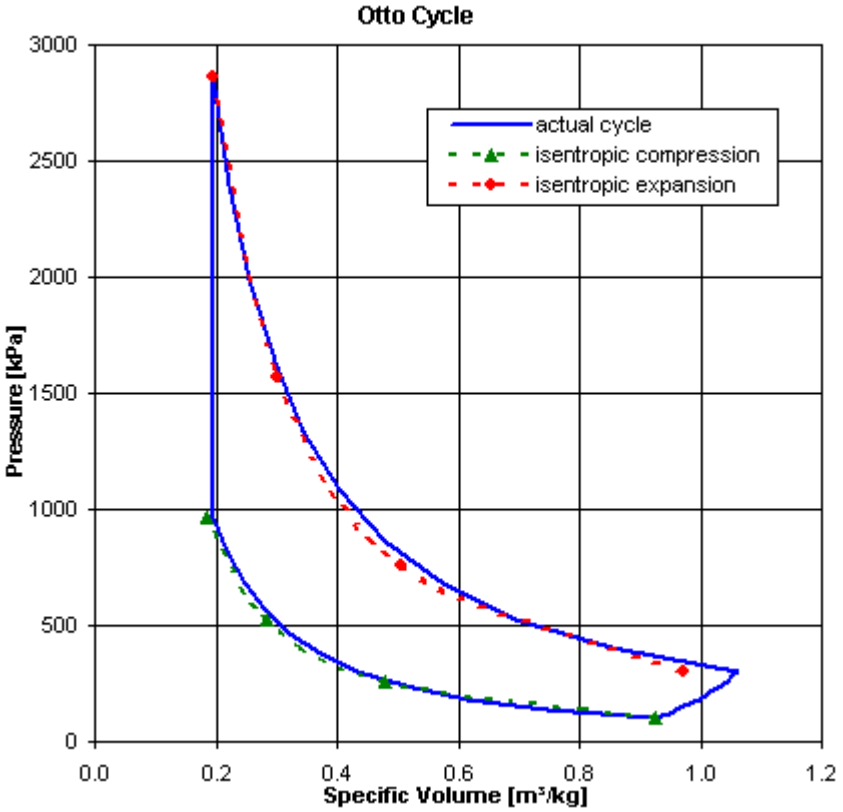
Otto Cycle
actual cycle
isentropic compression
isentropic expansion
Pressure [kPa]
Specific Volume [m³/kg]
3000
2500
2000
1500
1000
500
0
0.0
0.2
0.4
0.6
0.8
1.0
1.2

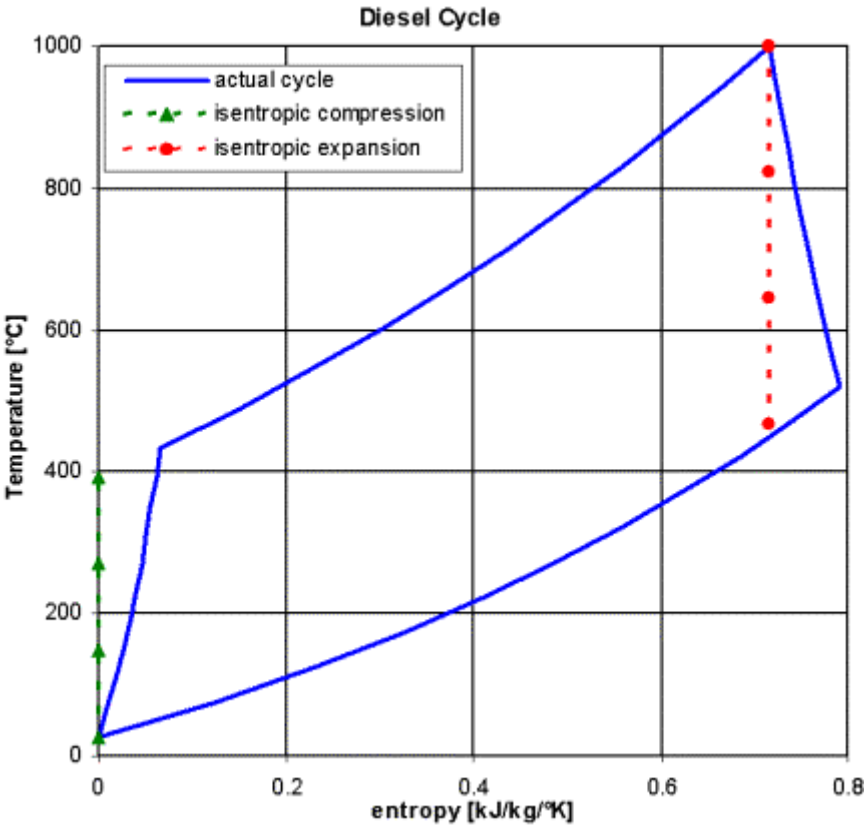
Diesel Cycle
actual cycle
isentropic compression
isentropic expansion
Temperature [°C]
1000
800
600
400
200
0
0
0.2
0.4
0.6
0.8
entropy [kJ/kg/°K]

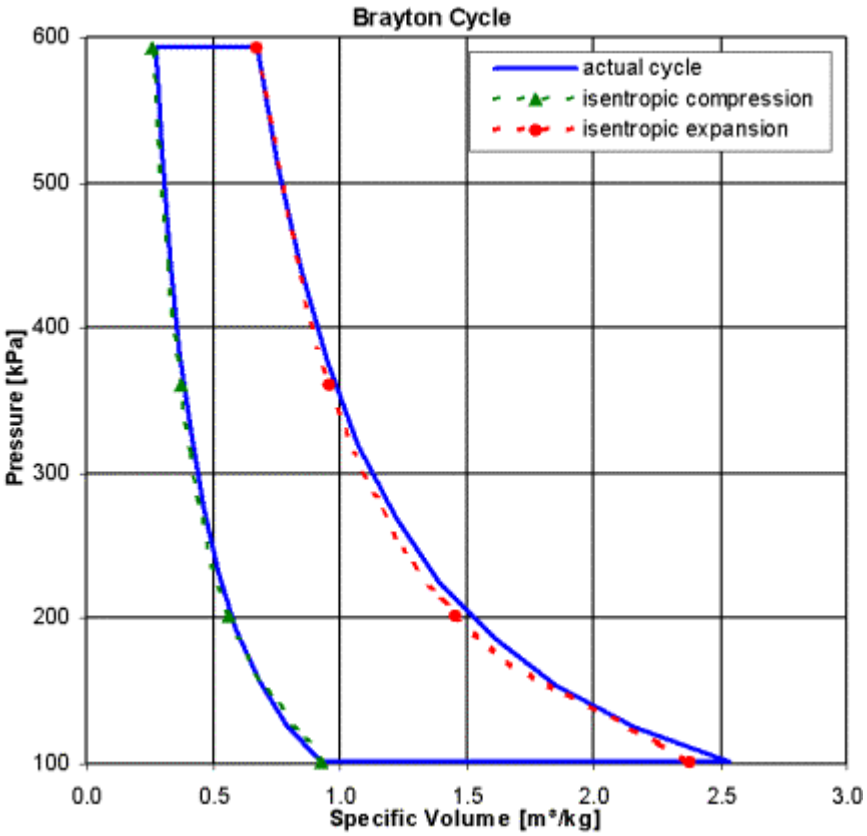
Brayton Cycle
actual cycle
isentropic compression
isentropic expansion
Pressure [kPa]
600
500
400
300
200
100
0.0
0.5
1.0
1.5
2.0
2.5
3.0
Specific Volume [m³/kg]

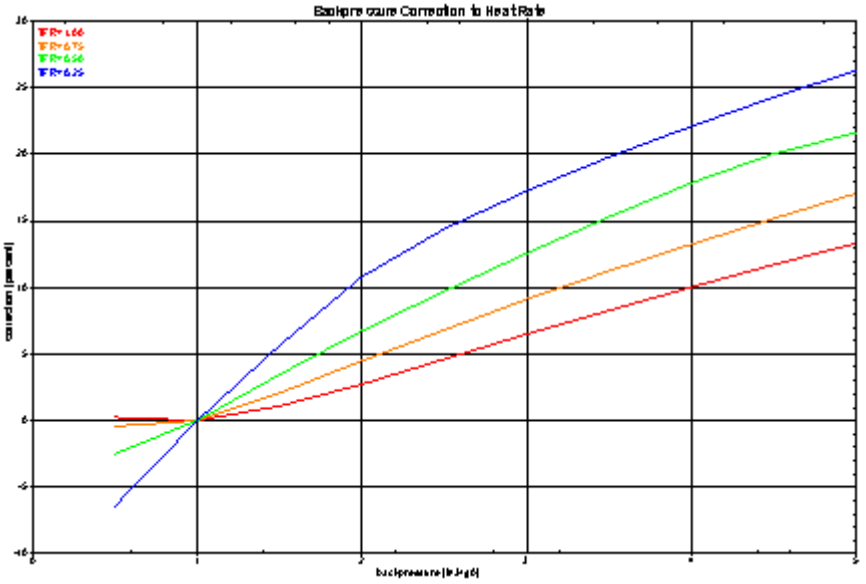
Backpressure Correction to Heat Rate
IFR=1.66
IFR=1.75
IFR=1.84
IFR=1.93
correction [percent]
backpressure [in Hg a]

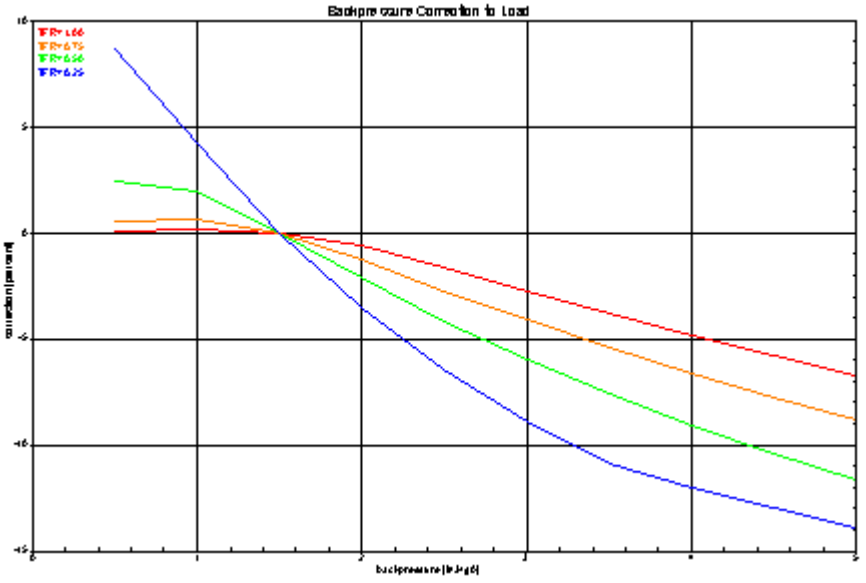
Backpressure Correction to Load
IFR=1.66
IFR=1.75
IFR=1.84
IFR=1.93
correction [percent]
backpressure [in Hg a]

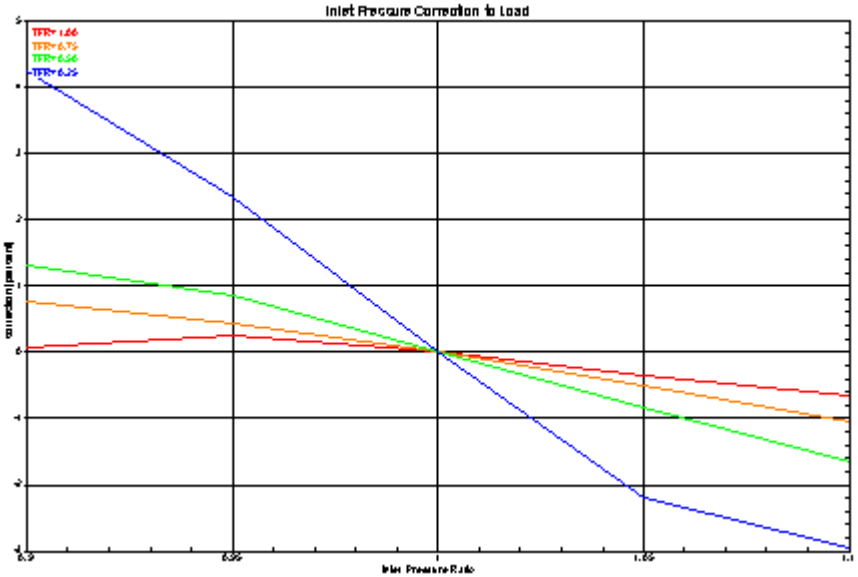
Inlet Pressure Correction to Load
TPR= 1.66
TPR= 1.75
TPR= 1.66
TPR= 1.25
correction [percent]
Inlet Pressure Ratio

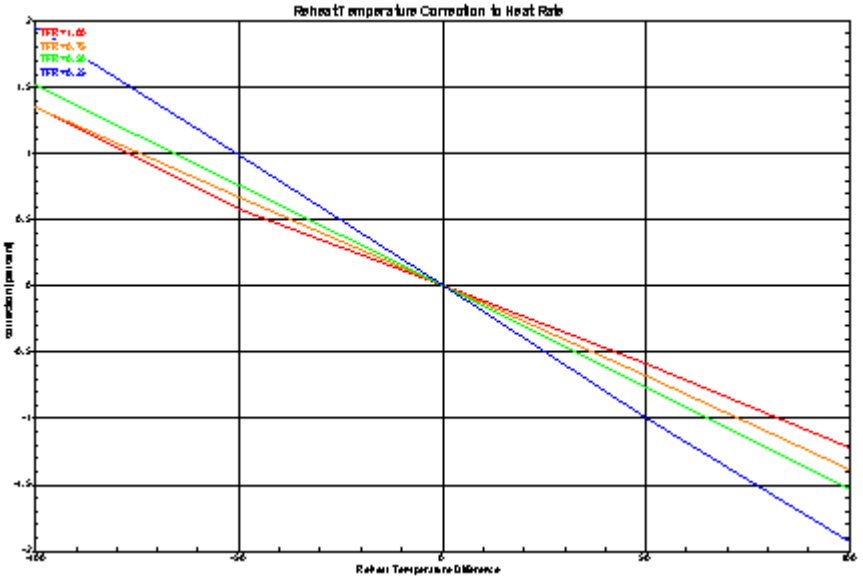
Reheat Temperature Correction to Heat Rate
TFR = 1.05
TFR = 1.10
TFR = 1.20
TFR = 1.25
correction (percent)
Reheat Temperature Difference